Product Manual

for

S7000 Series Zigbee Embedded Wireless Communication Module

SHJ Electronic Co., Ltd.

www.shjelectronic.com

I. Introduction

S7000 series embedded wireless communication modules, integrated with RF transceiver and microprocessors based on standard ZIGBEE protocol, long distance communication, strong anti EMI capability, reliable and flexible is main characteristics of this module. Can realize the point-to-point, point-to-multipoint, multipoint-to-multipoint data transmission, Can form a star, peer to peer and mesh network structure.

S7000 series wireless communication module data interface including: TTL level RXD/TXD, RS232 level RXD/TXD .Can transfer data by broadcast way, according to the target address, not only point to point transfer data also can multipoint to multipoint via repeater technical the Zigbee protocol support. The user only need care about serial port(TTL or Rs232) do their developing job to short time release their product on market.

S7000 series wireless communication module is divided into central coordinating, routers and terminal .central coordinating in charge of setup wireless network and network maintenance, management. The router in charge of receive data and re-transfer it, terminal only receive and transfer data related to his own address. Coordinating center, router and terminal use the same hardware, in which mode you want the module work you should use jumper or I/O pins from another microprocessor to configure.

II. Technical Parameters

Category	Index Name	S7000 Series Wireless Module
Wireless Networks	The transmission distance	100 meters - 2,000 meters
	Network topology	Star, tree and chain type, mesh network
	Addressing mode	IEEE802.15.4 / ZIGBEE standard address
	Network ID	255
Data Interface	Maximum packets	256 bytes
	Data interface	TTL level and standard RS232 serial transceiver,
	Serial signal	TxD, RxD, GND
	Serial rate	1200 ~ 38400 bps
	Serial calibration	None, Even, Odd
	Data bits,	7, 8
	parity	1
Transceiver	Modulation mode	The DSSS direct sequence spread spectrum
	Frequency range	2.405GHz~ 2.480GHz
	A radio channel	16
	Receiving sensitivity	-94 dbm
	Transmission power	-27dBm~25dBm
	Antenna	Exernal SMA antenna or PCB antenna
	To prevent conflict	GTS, CSMA - CA and CSMA - CA
Power	Input voltage	DC 5V
	I/O	DC 3.3V
	Maximum current	70 mA
	Largest recipient current	55 mA
	Standby current	10 mA
	Power saving mode	110 uA
	Sleep patterns	30 uA
Working Environment	Working temperature	-40°C ~ 85°C
	Storage temperature	-55°C ~ 125°C

III. Interface

S7000 Series wireless modules has several interface the user should take care ,includes power input, data transceiver ,LED indication ,control port and antenna. Connector is two column 2.54mm(100mil) SIP connector .Pins definition see below table.

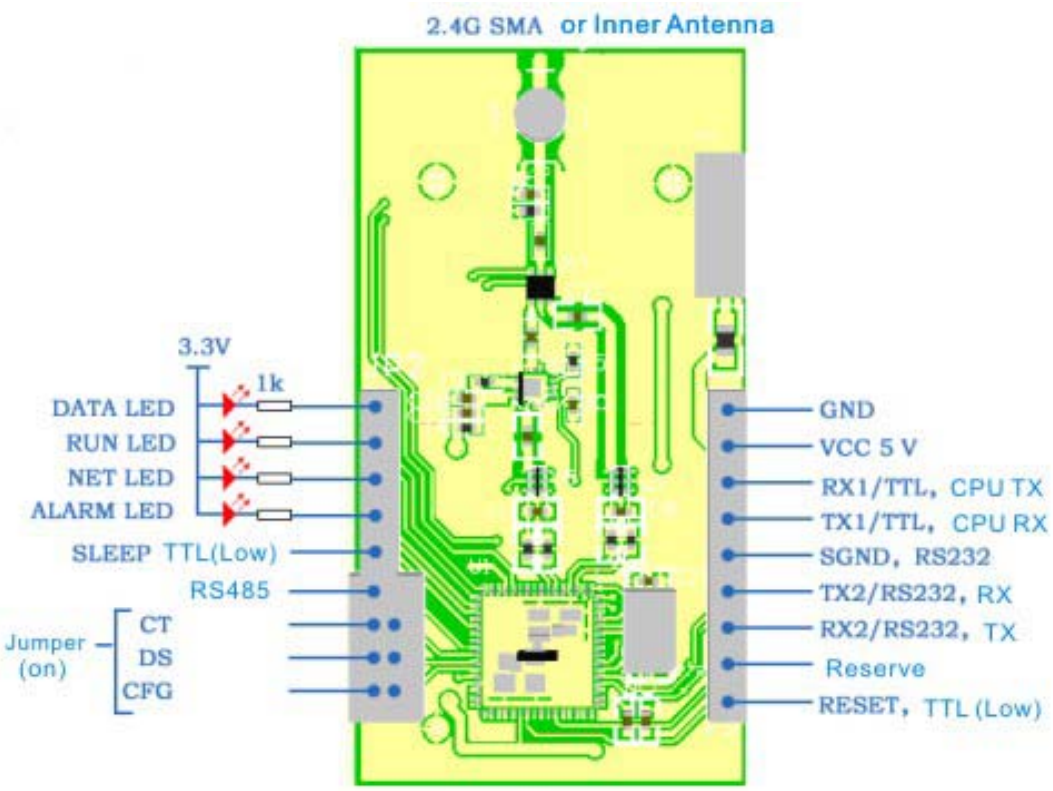

3.1 Module to the right of Pin Identification

Sequence	Mark	Function	Notes
1	**GND**	Ground	
2	**+5V**	Power input +5V	
3	**RX1/TTL**	TTL level input	Connect to TX pin of user's system
4	**TX1/TTL**	TTL level output	Connect to RX pin of user's system
5	**SGND**	Serial RS232 ground	Ground
6	**TX2/RS232**	Serial RS232 output	Connect to RX of user's RS232
7	**RX2/RS232**	Serial RS232 input	Connect to TX of user's RS232
8	**N/A**	System reserved	NC
9	**RESET**	System reset	Valid in LOW level

3.2 Module to the left of Pin Identification

Sequence	Mark	Function	Notes
1	**DATA**	Indication for data communication	Valid in Low level, flashing in data transceiver
2	**RUN**	LED for Module works	Active in low level, flashing in 1Hz frequency
3	**NET**	Network indicator	Active in low level, the center succeeded in building a network node or slave node enter the network sucessfully
4	**ALARM**	System warning light	Active in low level
5	**SLEEP**	Low power consumption	Low level enter sleep mode ,high level or NC in work mode.
6	**485CTL**	485 transceiver control	Low level receive and high level send data
7	**CENTER**	Center node	Active in low level. Both pin7 and 8 are high level or NC, then module work in router mode.
8	**DEVICE**	Terminal node	Active in low level. Both pin7 and 8 are high level or NC, then module work in router mode.
9	**CONFIG**	Configuration interface	Active in low level.

3.3 Module Wiring Diagram

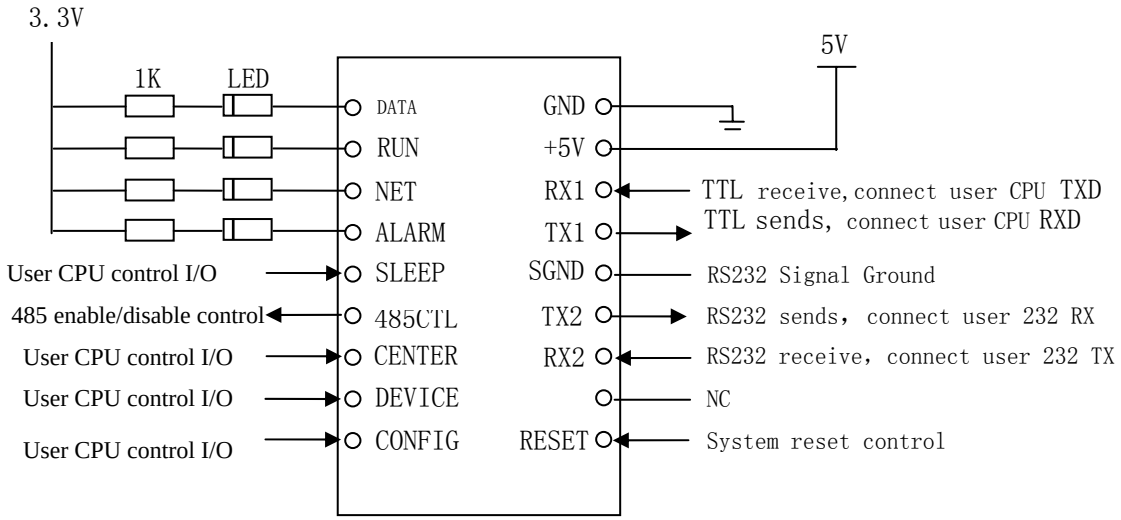

User system wiring one

Wiring One: User's MCU control wireless module. Recommend 3.3V for all I/O pins.

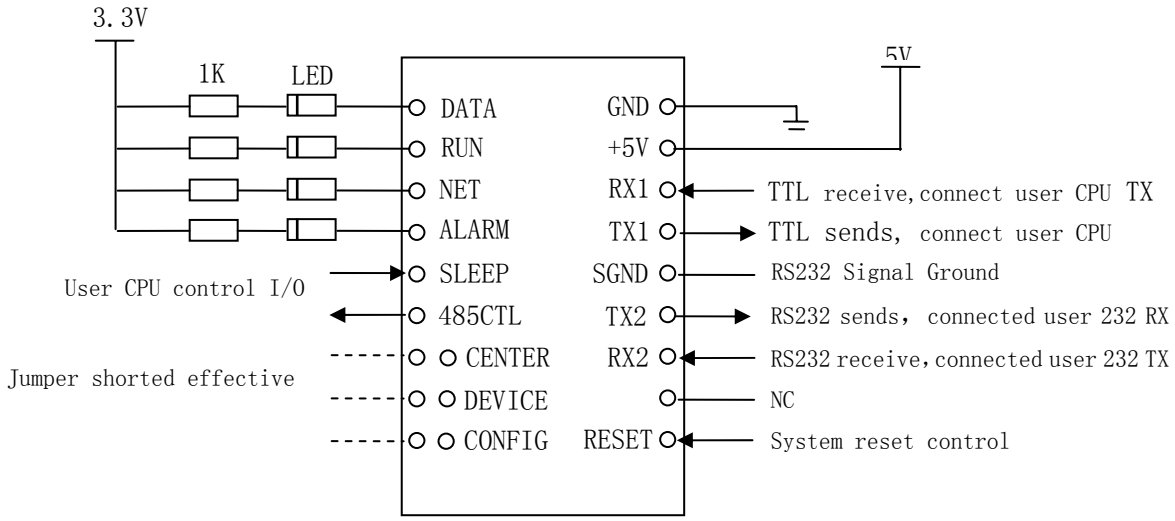

User system wiring two

Wiring Two: Select center, router or terminal mode according to the corresponding jumper .Only one of center and device can be put down to ground, and both of them not connection then module in router mode. Recommend 3.3V for all I/O pins.

3.4 Module Control Lines

Pin	Module Initialization	Valid State	User Control I / O initialization	Control State
DATA	High level 3.3V	Low level	——	——
NET	High level 3.3V	Low level	——	——
RUN	High level 3.3V	Low level	——	——
ALARM	High level 3.3V	Low level	——	——
SLEEP	High level 3.3V	——	High level 3.3V	Low level
485CTL	Low level	——	Disable/enable pin of Rs485	——
CENTER	High level 3.3V	Low level	High level 3.3V	Low level
DEVICE	High level 3.3V	Low level	High level 3.3V	Low level
CONFIG	High level 3.3V	Low level	High level 3.3V	Low level 3 second
RESET	High level 3.3V	Low level	High level 3.3V	Low level

3.5 Power Interface

S7000 Series Zigbee Wireless communication module standard operating voltage is DC5V, Operating voltage range :DC5-12V.

Note: The power of positive and negative can not be reversed, otherwise the module would be burned.

3.6 Data Interface

S7000 Series Zigbee wireless communication module provide standard RS232 and TTL serial port interface. Recommend TTL level is DC3.3V. Below table is default serial port parameter.

Serial port parameters	Default Set
Serial Rate	38400
Serial check	None
Data bits	8
Stop bit	1

Configuration interface settings

3.7 Configure Module Type

S7000 Series Zigbee wireless communication module can be configured as 3 different types to setup a wireless network. They are Center module, router module and terminal module.There are two ways to configure according to user's design. One is through jumpers another is by IO pins of user's MCU. Only one of center module and terminal module can be put ground(low level) to set

the corresponding module as center module or terminal module,both of them be put high level or no connection, then the module be configured as router module.

3.8 Change Parameters in Configuration Mode

Must enter configuration mode if user want to change baudrate or MAC address and so on. Put a pin called CONFIG to low level more than 3 seconds to enter configuration mode.

Below table shows the serial port parameters in configuration mode.

Serial port parameters	Default Set
baudrate	38400
Parity check	None
Data bits	8
Stop bit	1

Configuration interface settings

IV. Module Configuration

Module configuration options listed below：

Configuration options	Description	Notes	The default parameters
CHANNEL	Communication channel	Same channel in the same network	0x0F
NET_TYPE	Network type		Mesh network
NODE_TYPE	Module type		Router
NET_ID	Network ID	Same ID in same network	0 xFF
TX_TYPE	Send mode		radio
MAC_ADDR	Module address	Unique address for each Module	——
DATA_TYPE	Data types		HEX
DATA_BIT	Data bits		8
BAUD_RATE	Baud rate		9600
PARITY	Parity		NONE
TIME_OUT	Serial time out		5 ms
SRC_ADDR	Source address		Not output

4.1Signal Channel Setting

CHANNEL	Description	Notes
0-F	0 : 2.405GHz 1 : 2.410GHz 2 : 2.415GHz 3 : 2.420GHz 4 : 2.425GHz 5 : 2.430GHz 6 : 2.435GHz 7 : 2.440GHz 8 : 2.445GHz 9 : 2.450GHz A : 2.455GHz B : 2.460GHz C : 2.465GHz D : 2.470GHz E : 2.475GHz F : 2.480GHz	Recommended 4, 9, 14, 15 channels, can avoid WIFI interference。
G	AUTO mode, choose the best channel.	

4.2 NET_TYPE network type

NET_TYPEoptions	Network type	Configuration	note
MESH	Mesh network	In master-slave network, must have only center node.	In a network, the network type must be unique.
STAR	Star nets		
LINE_1	Chain type nets ID=1		
LINE_2	Chain type nets ID=2		
LINE_3	Chain type nets ID=3		
LINE_4	Chain type nets ID=4		
PEER	Peer-to-peer network	Not master-slave nets, no center node。	

4.3 Module Type

TYPE options	Network type	Configuration	Note
PAN_Coord	Center Module		There must be a center node in network。
ROUTER	Router Module	Can replace terminal ddevicd	
END_DEVICE	Terminal Module		

S7000 Series Zigbee wireless communication module has three Module types: the central Module, the router Module, terminal Module, each type can be set by jumpers or user's MCU according to user design.

4.4 The Network Number NET_ID Settings

Options	ID range	Configuration	Note
NET_ID	00—FF	In one network must have unique net_id.	

4.5 TX_TYPE mode Settings

TX_TYPE options	Send mode	Configuration	Note
BROADCAST	Broadcast mode	No target address.	Target address is 2 bytes MAC address, the first two bytes in a data package.
MASTER—SLAVE	Master-slave mode	Center Module must assign target address before send.Not center Module, then no need assign target address, because target address is center Module, it is default.	
POINT—POINT	peer-to-peer	Target address must assign for both direction.	

4.6 Module MAC_ADDR Address

MAC_ADR options	ID range	Configuration	note
MAC_ADDR	0000—FFFE	Center node address 0000。	With a network can not have the same address.

4.7 DATA_TYPE Data Types

DATA_TYPEoptions	Data types	Configuration
ASCII	ASCII	Only in the target address situations Settings, in broadcast cases without setting.
HEX	Hex	

4.8 DATA_BIT Data Setting

DATA_TYPEoptions	Data types	Configuration
7+1+1	7 data bits +1parity check bit + 1 stop bit	
8+0+1	8 data bits +0 parity check bit + 1 stop bit	
8+1+1	8 data bits +1parity check bit + 1 stop bit	

4.9 Serial BAUD_RATE Baud Rate

BAUD_RATEoptions	Baud rate scope	Configuration
1200	1200-38400	
38400		

4.10 DATA_PARITY Data Setting

DATA_PARITYoptions	Module types	Configuration
NONE	None	
EVEN	Even check	
ODD	Odd check	

4.11 Serial TIME_OUT

TIME_OUT options	Module types	note
TIME_OUT	1-255ms（Hexadecimal display）	Serial overtime time.

4.12 SRC_ADDR Address Data Setting

SRC_ADRoptions	Source address	Configuration
NOT OUTPUT	Don't output source address	According to the application to choose whether to display source address in data packets.
HEX	Hexadecimal output Hexadecimal output	
ASCII	ASCII output	

Hexadecimal way output source address formats: 2 bytes of data source address + data package, ASCII mode output source address formats: 4 bytes of data source address + data package.

V. Data Sending Instructions

5.1 Data Transmission Mode

Module type	Send mode	Target Module	Data Format
Center Module	Broadcast	All Module except center Module	Data transfer directly
	Master-slave or peer-to-peer	Target address Module	Target address + data package
Not center Module	broadcast	All Module except center Module	Data transfer directly
	Master-slave	Center Module	Data transfer directly
	peer-to-peer	Target address Module	Target address + data package

5.2 Data Format

Send mode	Data coding	Data frame format
Data transfer directly		Do not need any changes
Target address + data package	Hexadecimal target address	2 bytes target address + data package
	ASCII target address	4 bytes target address + data package

VI. Installation of Module

6.1 Module Installation Dimensions(mm)

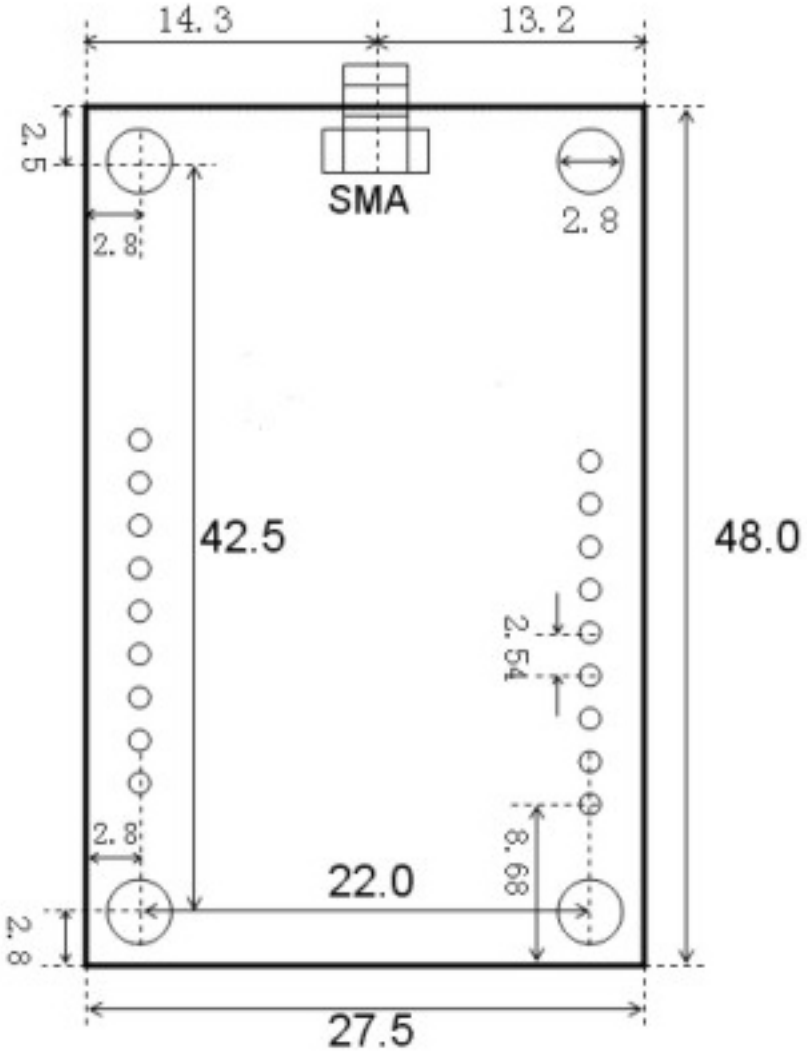

6.2 LED indication

S7000 Series Zigbee wireless communication module provides 4 working status LEDs indication, which is data communication, system running, status of network and warning. Details see below table.

LEDs	Status	Description
Data,	Flashing	Data communication is working.
running	Flashing in 1Hz frequency	System runs normally
	Turn off	Module is not running, no power or burned out
Network,	ON	Center node set success, other Module have joined network
	OFF	Not connected to network
alarm	OFF	Work properly
	ON	Abnormal or enter special system status(see below)

Special system status：

Instructions	Instruction meaning
Data, run, net, alarm LEDs flashing not regular	Module be power on first time, no initialization data
Data, run, net, alarm LEDs flashing synchronously	Module is working in configuration mode. Put configure pin to ground more than 3 seconds can enter this mode.
Alarm and run Led flashing in 1Hz frequency, data led no flashing	Module in administration mode

6.3 Cautions

1. The model does not have waterproof functions, please don't be installed the product directly outdoor and moist place.
2. This product is a wireless electronic products, please don't be installed in the metal shielding case, better to install in the open, no obstacle place.
3. This product is installed in outdoor, please install the lightning rod, in case of lightning.