S6889

Multiple Protocol Converter

User's Manual

SHJ

Sales: Michael@shjelectronic.com

Support: support@shjelectronic.com

S6889 is a multiple protocol converter, can do Ethernet to Zigbee, Ethernet to RS485, Ethernet to Rs232, RS232 to Zigbee, RS232 to RS485. For Ethernet always support Modbus/TCPIP protocol, and RS232, RS485, Zigbee always support standard modbus protocol. Power supply has reverse protection, lightning, static, over voltage, over current protection. All communication port also have lightning, static protection.

Highlights:

- Industry Ethernet with MODBUS/TCPIP protocol
- RS232, RS485, ZIGBEE with MODBUS protocol
- Rs485 port can attach 254 slave RS485 device
- The maximum Zigbee communication distance up to 3000 meters
- The Zigbee radio can configure as master, terminal and repeater
- Can build Zigbee network with thousands Zigbee products by setup Zigbee wireless signal channel and device address
- A lot of spare FLASH can be used to store user's parameters
- A lot of RAM/ROM can use to add more features
- Can update firmware through RS232 port by user
- LEDs indicate each port and system work status
- Integrate clock can do some schedule according to user requirement
- DIN rail support available

Application:

- ✓ Remote data acquisition
- ✓ Process monitoring
- ✓ Industrial process control
- ✓ Energy management
- ✓ Supervisory control
- ✓ Security systems
- ✓ Laboratory automation
- ✓ Building automation
- ✓ Product testing
- ✓ Direct digital control

Technical data:

Output BUS----------Ethernet/RS232/RS485/ZIGBEE

RS232/RS485/ZIBEE protocol----------MODBUS/RTU

Ethernet protocol----------MODBUS/TCPIP

Output Protection----------Lightning,static
Power input----------12~24V(AC/DC)
Power consumption----------75 mA@24VDC
Ambient temperature:
Operation---------- -20~85℃(-13~185℉)
Storage---------- -40~100℃(-40~212℉)
Ambient humidity----------10%~90%RH
Material,enclosure----------Flame proof plastic
Enclosure rating----------IP31
Colour----------White/Black
Size----------115*90*43 mm

Wiring Diagram and Description:

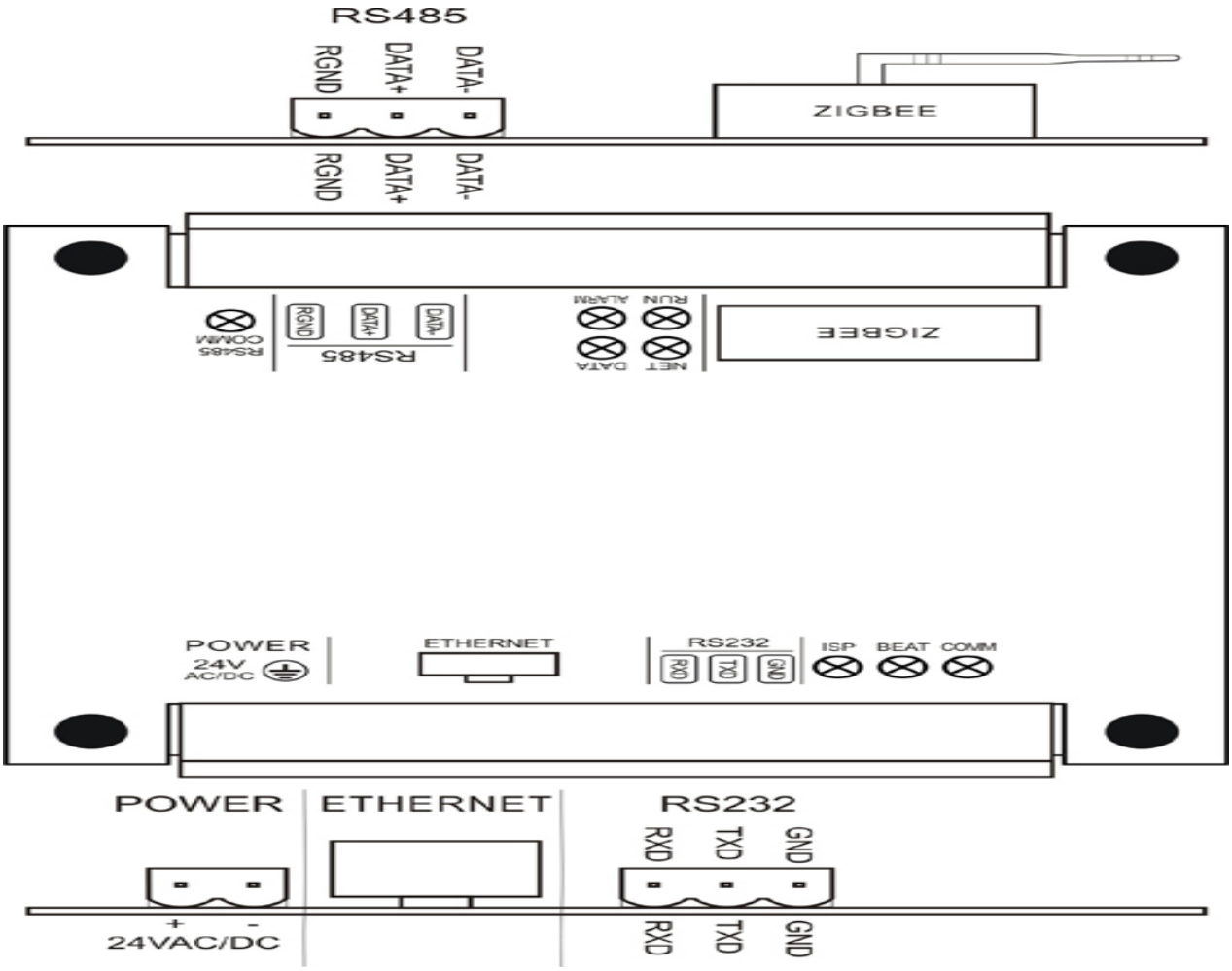

Top View Figure

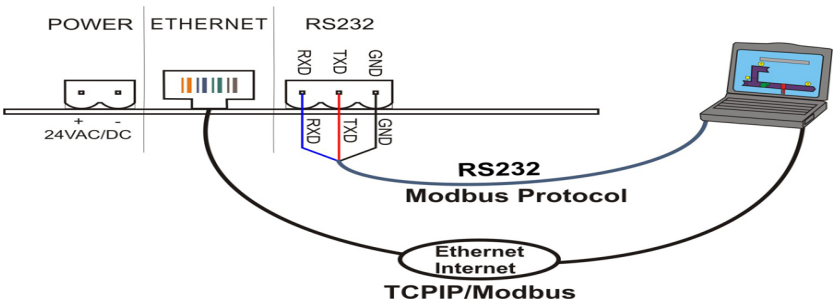

Wiring Diagram _ RS232/Ethernet

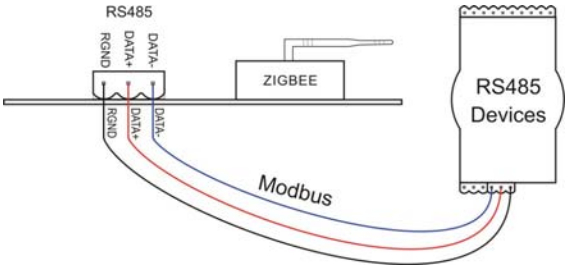

Wiring Diagram _ RS485

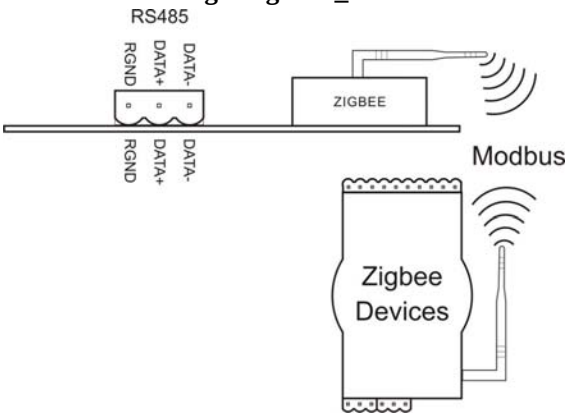

Wiring Diagram _ Zigbee wireless

PINs and LEDs

Power supply

24VAC: power supply positive input, has reverse protection, accept AC and DC input

- : Power supply negative input

RS232 Port

RXD: Connect to TXD of PC

TXD: Connect to RXD of PC

GND: Connect to GND of PC

We will provide a cable to connect to RS232 port of user PC.

RS485 Port

RGND: Connect to earth for RS485 cable if necessary

DATA+: Connect to A end of RS485

DATA-: Connect to B end of RS485

ZIGBEE port

Here connect Zigbee wireless antenna

Ethernet port

Connect to local Ethernet network through RJ45 cable

LEDs

Link: Will solid on when connect to Ethernet

Act: Will flashing when has data transport between S6889 and local Ethernet

Heart: Will flash when system is working

Comm: Will flash when RS232 serial port communication

RS485 Comm: Will flash when RS485 serial port communication

Alarm: Will solid ON when zigbee abnormal

Run: Will flash when zigbee radio works

Data: Flash when has data transport from Zigbee port

Net: Solid ON once Zigbee radio join a zihbee network successfully

Jumpers

ISP1: The default position is work mode, change the jumper to another end then power ON the product will enter program mode

ISP2: Do not change the jumper normally, even when you program the product, once you have problem when program then change the jumper

Modbus Register List:

Note: * means default value

Address	Bytes	Value range		Description	Property
		Min	Max		
0-3	4	1	4294967295	Serial number, unique for each product	R
4-5	2	100	65535	Firmware version number	R
6	1	1	254	Device address	R/W
7	2	6889	16889	Product model,6889 means RS485 port available,16889 means Zigbee available	R
8	1	1	255	Hardware version	R

<table>
<tr><td>9</td><td>2</td><td>12</td><td>1152</td><td>Baudrate setting
<table>
<tr><th>Value</th><th>Buadrate</th></tr>
<tr><td>12</td><td>1200</td></tr>
<tr><td>24</td><td>2400</td></tr>
<tr><td>48</td><td>4800</td></tr>
<tr><td>96</td><td>9600</td></tr>
<tr><td>192</td><td>19200</td></tr>
<tr><td>384</td><td>38400</td></tr>
<tr><td>576</td><td>57600</td></tr>
<tr><td>1152</td><td>115200</td></tr>
</table>
For example: write 96 to register 9 to set the baudrate 9600.</td><td>R</td></tr>
<tr><td>10-99</td><td>-</td><td>-</td><td>-</td><td>Reserved</td><td>-</td></tr>
<tr><td>100</td><td>1</td><td>2</td><td>100</td><td>Serial port respond delay, the unit is 2.5ms.</td><td>R/W</td></tr>
<tr><td>101</td><td>1</td><td>0</td><td>99</td><td>Clock,year</td><td>R/W</td></tr>
<tr><td>102</td><td>1</td><td>1</td><td>12</td><td>Clock, month</td><td>R/W</td></tr>
<tr><td>103</td><td>1</td><td>0</td><td>6</td><td>Clock ,week</td><td>R/W</td></tr>
<tr><td>104</td><td>1</td><td>1</td><td>31</td><td>Clock ,day</td><td>R/W</td></tr>
<tr><td>105</td><td>1</td><td>0</td><td>23</td><td>Clock,hour</td><td>R/W</td></tr>
<tr><td>106</td><td>1</td><td>0</td><td>59</td><td>Clock, minute</td><td>R/W</td></tr>
<tr><td>107</td><td>1</td><td>0</td><td>59</td><td>Clock,second</td><td>R/W</td></tr>
<tr><td>108</td><td>2</td><td>0</td><td>65535</td><td>Zigbee module address</td><td>R/W</td></tr>
<tr><td>109</td><td>1</td><td>0</td><td>255</td><td>Net ID, the default is 255</td><td>R/W</td></tr>
<tr><td>110</td><td>1</td><td>1</td><td>7</td><td>Net type,01 = mesh network, 02 = star network, 07 = peer to peer network.. default is 02.</td><td>R/W</td></tr>
<tr><td>111</td><td>1</td><td>1</td><td>4</td><td>Module type,01 = center module, 03 = router module, 04 = terminal module. The default is 04.</td><td>R/W</td></tr>
<tr><td>112</td><td>1</td><td>1</td><td>3</td><td>Transfer mode. 01 = broadcast, 02 = master-slave, 03 = peer to peer. Default is 02.</td><td>R/W</td></tr>
<tr><td>113</td><td>1</td><td>0</td><td>15</td><td>Signal channel, recommend is 4,9,14,15.</td><td>R/W</td></tr>
<tr><td>114</td><td>1</td><td>0</td><td>1</td><td>Send parameters to Zigbee module.1 = send.</td><td>R/W</td></tr>
<tr><td>115</td><td>1</td><td>0</td><td>1</td><td>Get parameters from Zigbee module. 1 = get.</td><td>R/W</td></tr>
<tr><td>116-199</td><td>-</td><td>-</td><td>-</td><td>reserved</td><td>-</td></tr>
<tr><td>200-203</td><td>1</td><td>0</td><td>255</td><td>Device local IP address, default is 192.168.0.X</td><td>R/W</td></tr>
</table>

204-207	1	0	255	Gate way address, default I is 192.168.0.1	R/W
208-211	1	0	255	Subnet address, default is 255.25.255.0	R/W
212-217	1	0	255	MAC address	R/W
218	2	0	65535	Port number, default is 502, Write this register also save value of register 200 to 218.	R/W

Converter Description:

Ethernet to Zigbee/RS485

System receive data from Ethernet is based on Modbus/TCPIP protocol, will check the device ID ,if the device ID match local address or is broadcast address 255 then system will respond according to the command.

If the device ID not match local address or 255,then S6889 will reorganize the data according to modbus protocol, send out through zigbee or RS485 port. If register 7 is 6889, then send/receive data to/from RS485 port, if register 7 is 16889, then send/receive data to/from Zigbee port.

RS232 to Zigbee/RS485

System receive data from RS232 is based on Modbus protocol, will check the device ID, if the device ID match local address or is broadcast address 255 then system will respond according to the command.

If the device ID not match local address or 255, then S6889 will send out through zigbee or RS485 port. If register 7 is 6889, then send/receive data to/from RS485 port, if register 7 is 16889, then send/receive data to/from Zigbee port.